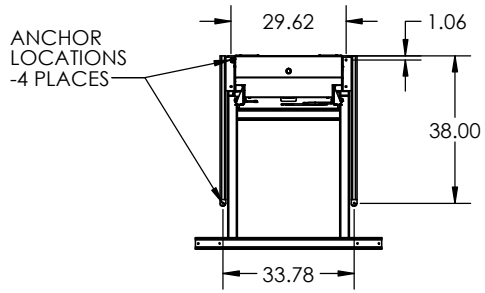

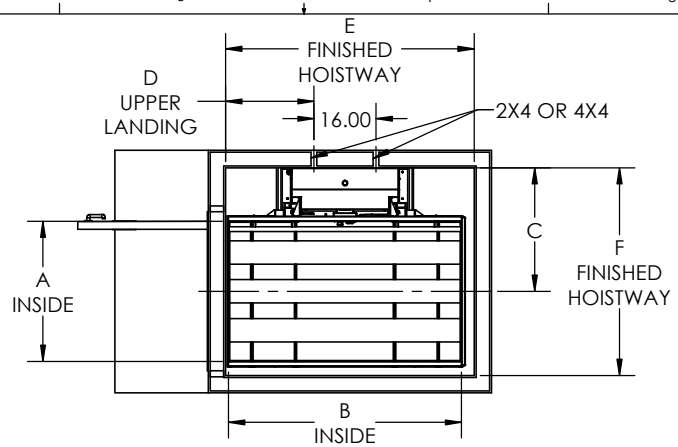

Specifications
Model: VP19
Rated Load: 750 lbs
Drive: Dual winding cable drums / 24 VDC
500 watt motor w/brake
Supply Power: 120 VAC 15A
Operating Power: 24 VDC (DUAL 12V 10AH BATTERIES)
Control Power: 5 VDC
Platform: 36" x 48" (36" x 54")(36" x 60")(42" x 60")
Lift Height: 1" - 144"
Speed: 15-18 fpm
Controls: Constant pressure
Safety Standards: ASME A18.1, Section 2
CSA B44.1/ASME A17.5
Safety Features: Safety pan, final limit, slack cable brake, emergency stop w/alarm

DIMESNIONS AND SPECIFICATIONS SUBJECT TO CHANGE

DESIGNED TO COMPLY WITH ANSI A18.1 PART 2 WHEN PROPERLY INSTALLED

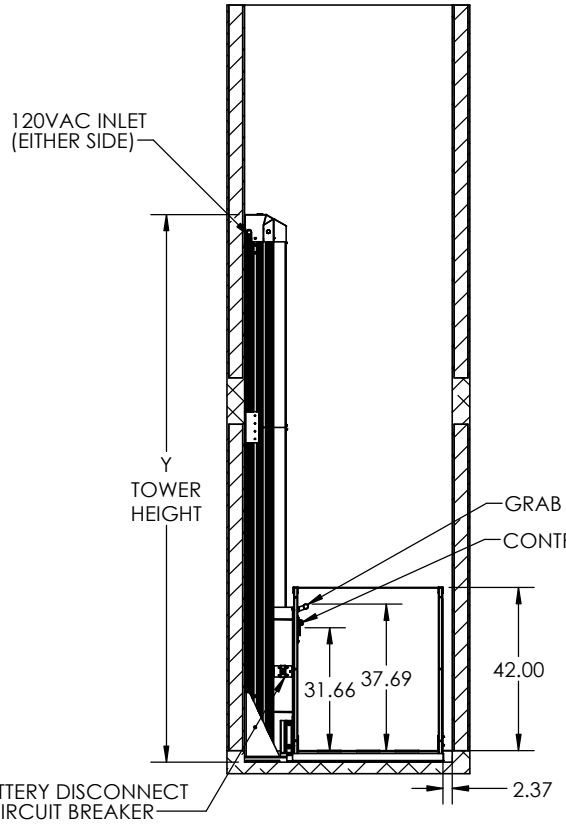

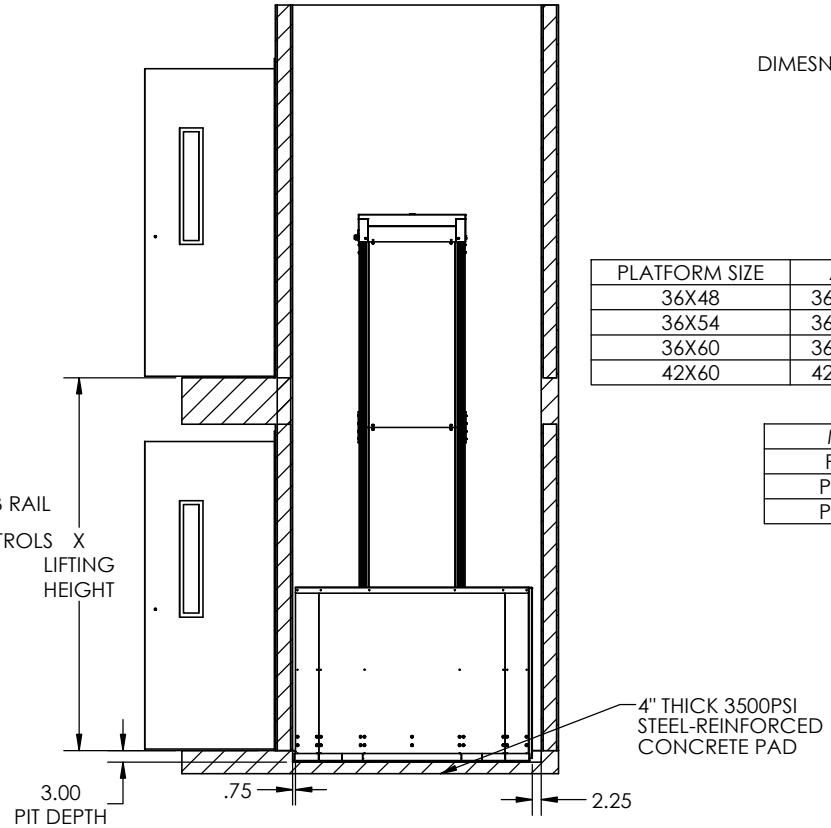

PLATFORM SIZE	A	B	C	D	E	F
36X48	36.25	48.00	31.81	16.75	52.00	53.50
36X54	36.25	54.00	31.81	16.75	58.00	53.50
36X60	36.25	60.00	31.81	22.75	64.00	53.50
42X60	42.25	60.00	34.81	22.75	64.00	59.50

MODEL	X	Y
PLH-096	96	141.06
PLH-0120	120	165.06
PLH-0144	144	189.06

CREST VPL

TITLE: PLATFORM LIFT - HOISTWAY PITTED

SIZE	DWG. NO.	REV
B	TYP-PLH-EE P	

01/24/2019

SCALE: WEIGHT: SHEET 1 OF 1